Revision	Description	Date	Approved
A	Initial Release	8/31/10	AG
B	Update	5/19/11	AG

Note: This schematic only shows the critical components and traces for minimum footprint with ENABLE tied to Vin in PWM mode. Alternate ENABLE configurations, and other small-signal pins need to be connected and routed according to specific customer application.

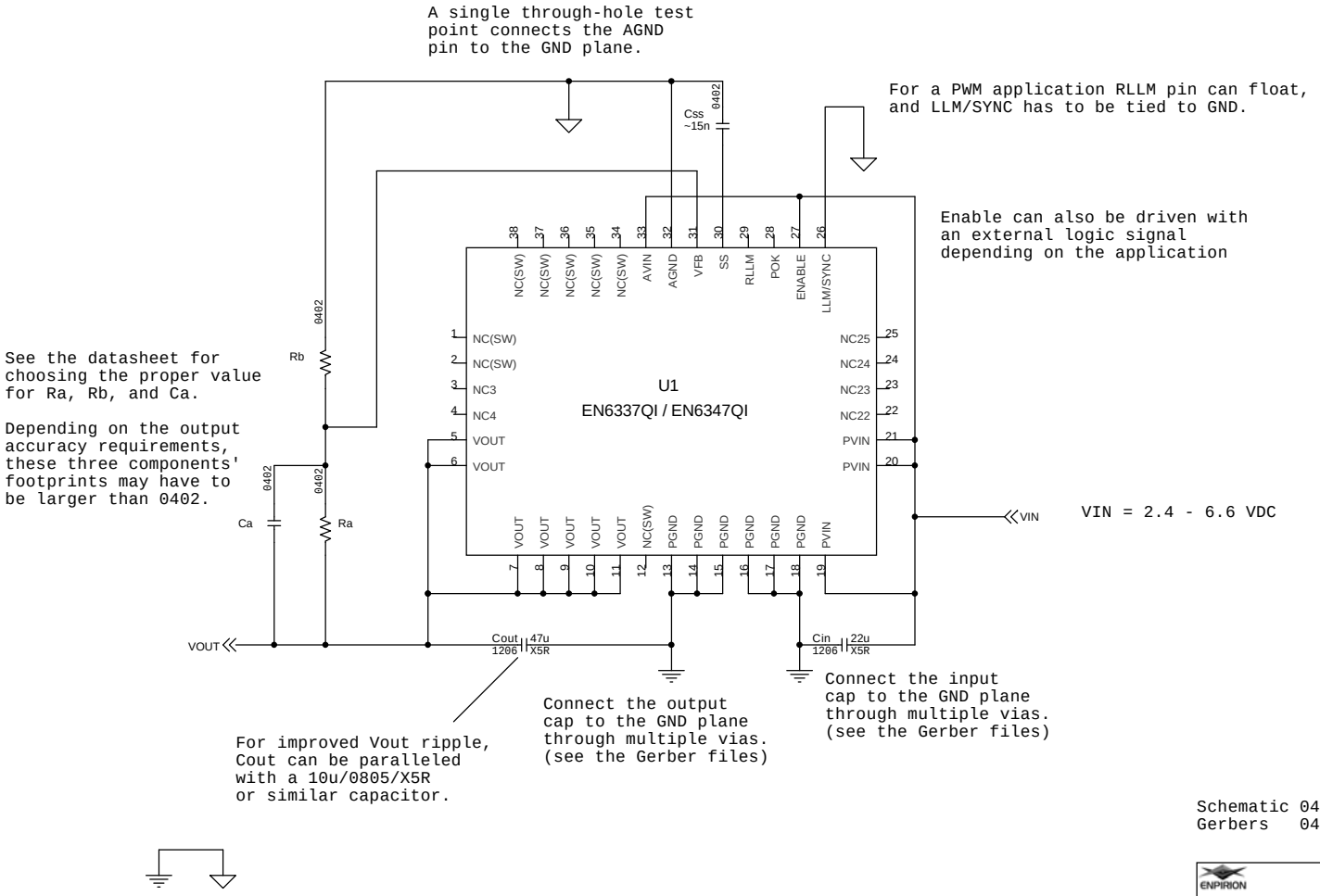

Schematic 04923
Gerbers 04924

ENPIRION

CONFIDENTIAL

Title	04923 EN6337QI/EN6347QI Critical Component Circuit		
Size	Drawing Number 04923	Drawn By A. Ghahary	Rev B
Date	August 31, 2010	Sheet of	